TECHNOTRON
METAL

L-TM Substructure System

L-TM is a unique system of passive substructure made of aluminum components enabling the elimination of the thermal bridge.

L-TM SUBSTRUCTURE SYSTEM

L-TM is a unique system of passive substructure made of aluminium components that eliminate heat bridges.

The excellent thermal insulation properties are achieved by using a strip of plastic on anchoring brackets made of EN AW 6060 aluminium and epoxy fibreglass with thermal conductivity coefficient λ = 0.36 W/mK, connected with stainless steel rivets.

The substructure components were subjected to a series of strength, fire and corrosive tests.

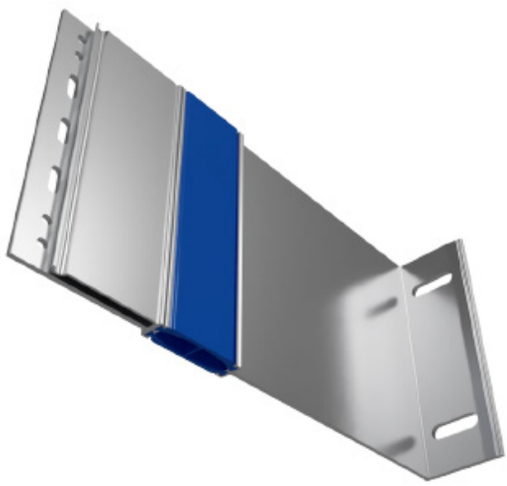

The system is suitable for installations where the priority is not to disturb the insulation properties of the building.

The system is suitable for all types of expanded metal for façades.
It can be mounted on the substructure as follows:

1. Expanded metal in frame
2. Expanded metal with back strips
3. Expanded metal anchored through liners

Expanded metal in frames

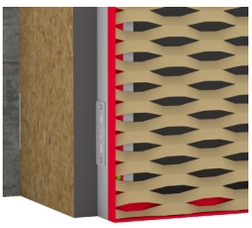

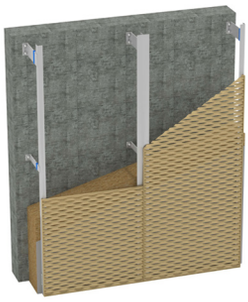

Expanded metal on strips

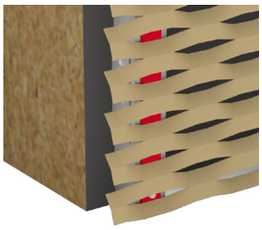

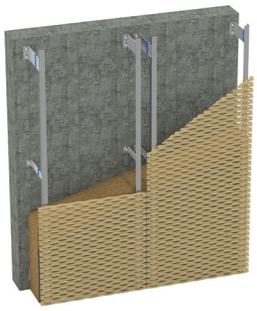

Expanded metal on supports

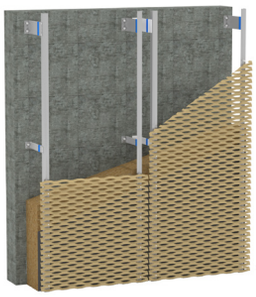

L-TM SUBSTRUCTURE SYSTEM

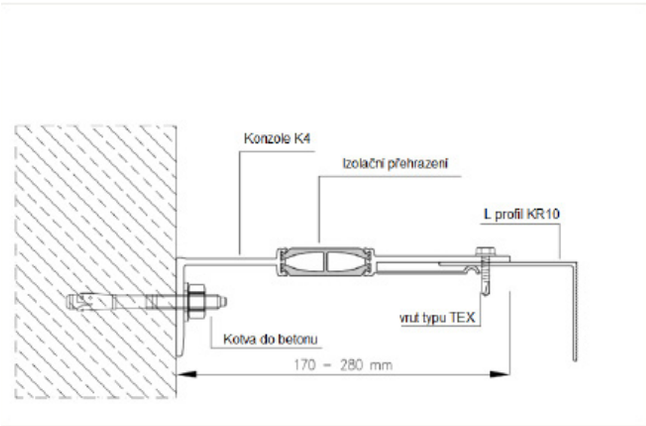

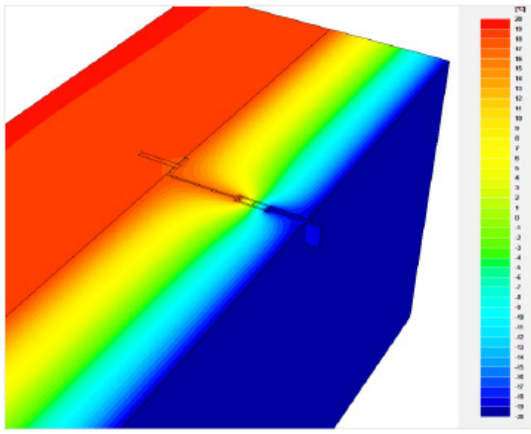

PP-M-K4 bracket

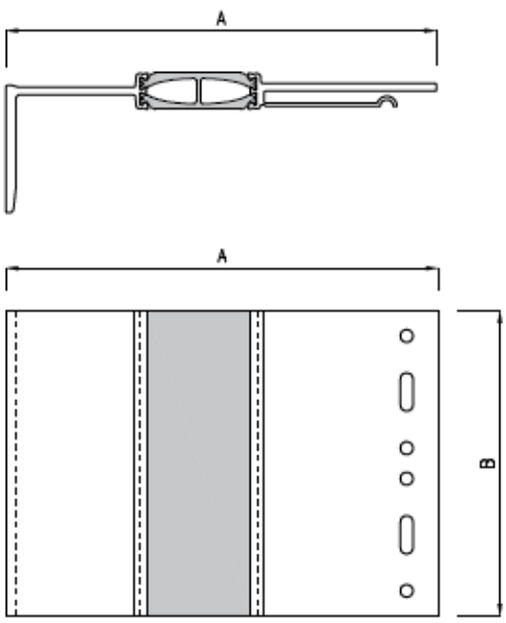

Designation	A	B
PP-TM-K4 170-150	170	150
PP-TM-K4 170-120	170	120
PP-TM-K4 170-90	170	90
PP-TM-K4 170-60	170	60
PP-TM-K4 200-150	200	150
PP-TM-K4 200-120	200	120
PP-TM-K4 200-90	200	90
PP-TM-K4 200-60	200	60
PP-TM-K4 220-150	220	150
PP-TM-K4 220-120	220	120
PP-TM-K4 220-90	220	90
PP-TM-K4 220-60	220	60
PP-TM-K4 240-150	240	150
PP-TM-K4 240-120	240	120
PP-TM-K4 240-90	240	90
PP-TM-K4 240-60	240	60
PP-TM-K4 260-150	260	150
PP-TM-K4 260-120	260	120
PP-TM-K4 260-90	260	90
PP-TM-K4 260-60	260	60
PP-TM-K4 280-150	280	150
PP-TM-K4 280-120	280	120
PP-TM-K4 280-90	280	90
PP-TM-K4 280-60	280	60

L-TM SUBSTRUCTURE SYSTEM

PP-TM-R10 L-section

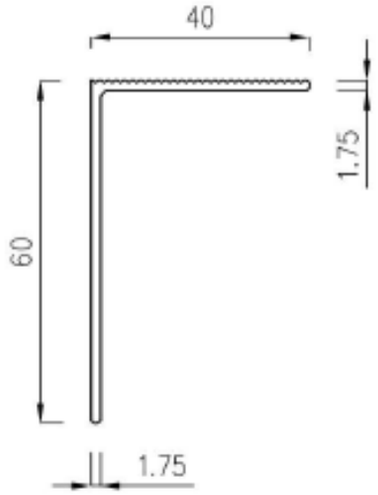

Designation:	Section length:	Weight:
PP-TM-R10	**3100 mm**	0,448 kg/m

PP-TM-R9 T-section

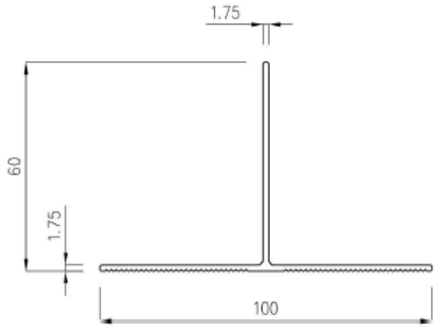

Designation:	Section length:	Weight:
PP-TM-R9	**3100 mm**	0,712 kg/m

L-TM SUBSTRUCTURE SYSTEM

List of point heat transfer coefficients – or heat bridges – K4 brackets

Width	Height	Insulation wool thickness	Thermal conductivity coefficient for insulati-on wool	Foundation thickness	Type of f oundation	SThermal conducti-vity coefficient for foundation	Point heat trans-fer coefficient
[mm]	[mm]	[mm]	[W/(mK)]	[mm]	[-]	[W/K]	[W/K]
170	150	150	0,034	240	Reinforced concrete	2,5	0,0075
					Silicate.	0,8	0,00675
					Porotherm	0,6	0,00625
					Autoclaved aera-ted concrete.	0,3	0,005
	60				Reinforced concrete	2,5	0,00325
					Silicate	0,8	0,003
					Porotherm	0,6	0,00275
					Porous concrete	0,3	0,00225
200	150	180	0,034	240	Reinforced concrete	2,5	0,00825
					Silicate.	0,8	0,00750
					Porotherm	0,6	0,00724
					Autoclaved aera-ted concrete.	0,3	0,006
	60				Reinforced concrete	2,5	0,00375
					Silicate	0,8	0,0035
					Porotherm	0,6	0,00325
					Porous concrete	0,3	0,00275
220	150	200	0,034	240	Reinforced concrete	2,5	0,009
					Silicate.	0,8	0,00825
					Porotherm	0,6	0,00775
					Autoclaved aera-ted concrete.	0,3	0,00650
	60				Reinforced concrete	2,5	0,00425
					Silicate	0,8	0,004
					Porotherm	0,6	0,00375
					Porous concrete	0,3	0,003

EN 15085-2

ISO 9001

ISO 3834-2

EN 1090-1

EN 1090-2

EN 1090-3

TECHNOTRON
METAL

+420 601 365 730

info@eplechy.cz

technotron-metal.cz/en

Technotron-Metal, s.r.o.

Priborska 1494

738 01 Frydek-Místek, Czech Republic

IČ: 02299160, DIČ: CZ02299160